MATSUMOTO S-71 PULSE UNIT - CONTROL BOARD, SURFACE-MOUNT VERSION (SMD REV A)

Blue names are nets: the same name is the same wire. J1.xxx = screw terminal on the board's 12 V edge. Pin numbers are shown in grey (SOIC / SMD-6 numbers = DIP numbers).

SUPPLY

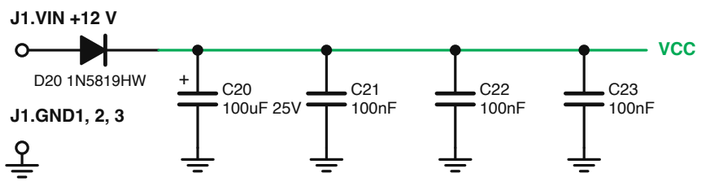

REFERENCE VREF = VCC / 3

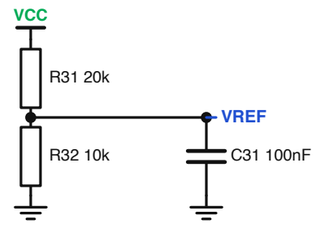

2 POWER-ON RESET (holds U1 in reset for 0.4 s so nothing can fire at switch-on)

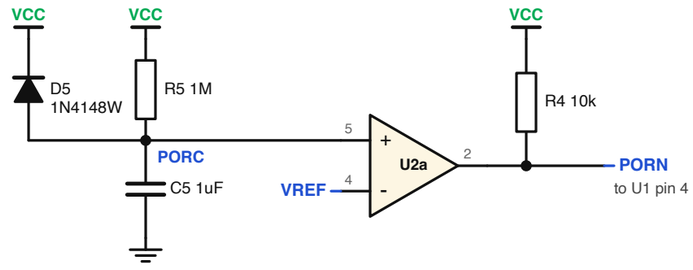

1 FIRE BUTTON AND LOCK-OUT TIMER (one shot, then about 24 s before the next)

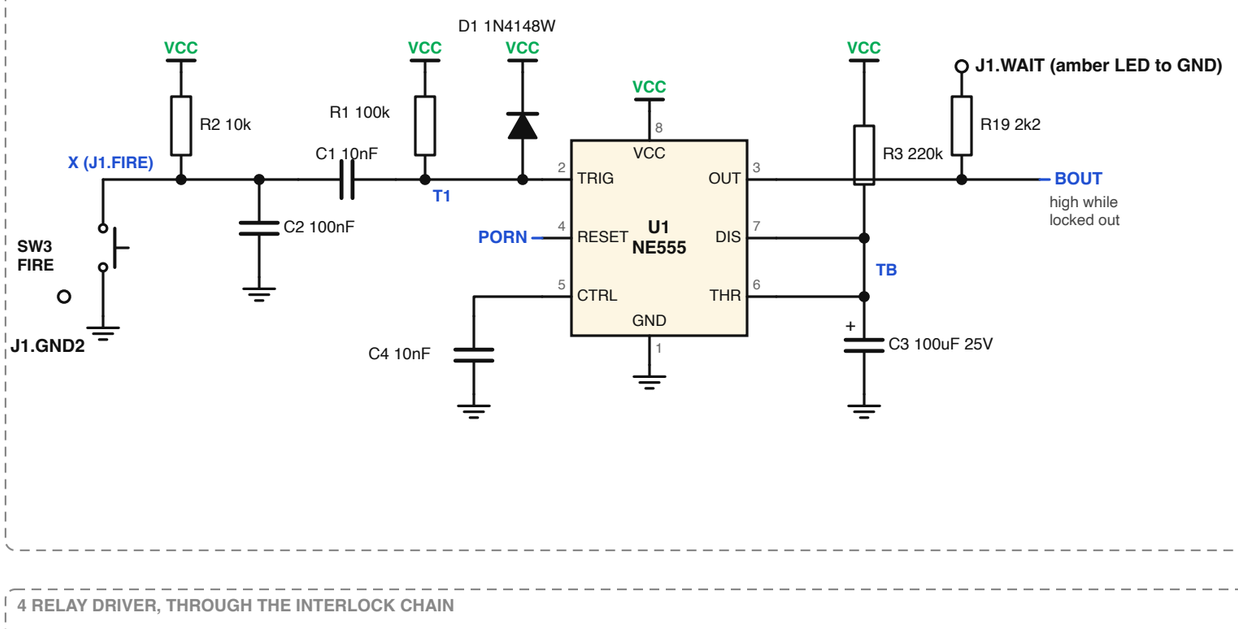

3 RELAY WINDOW (output relay is energised only for the first 1.6 s of each lock-out period)

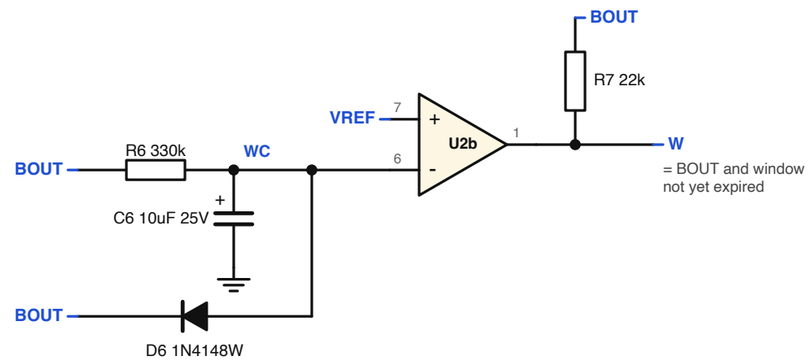

4 RELAY DRIVER, THROUGH THE INTERLOCK CHAIN

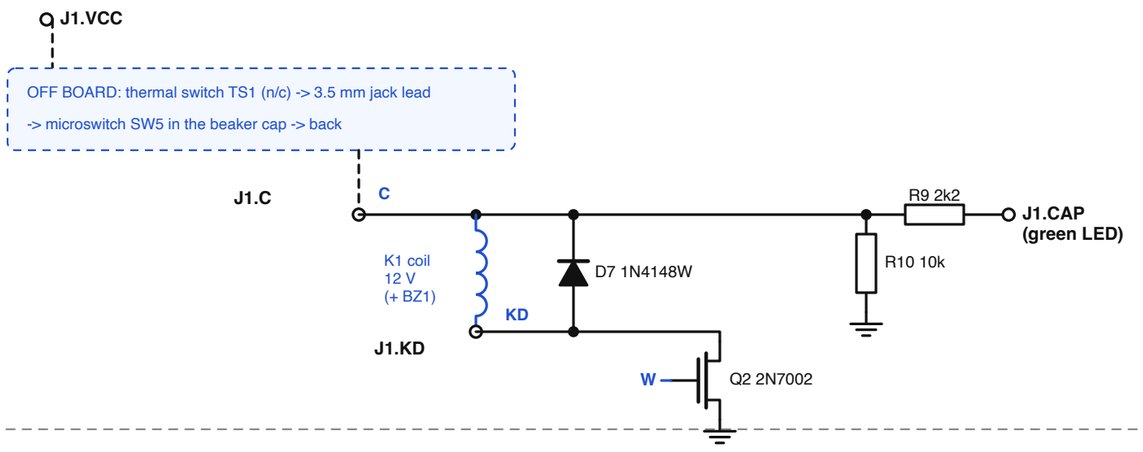

5 PRE-DELAY (waits 0.11 s for the relay contacts to settle, then triggers the pulse timer)

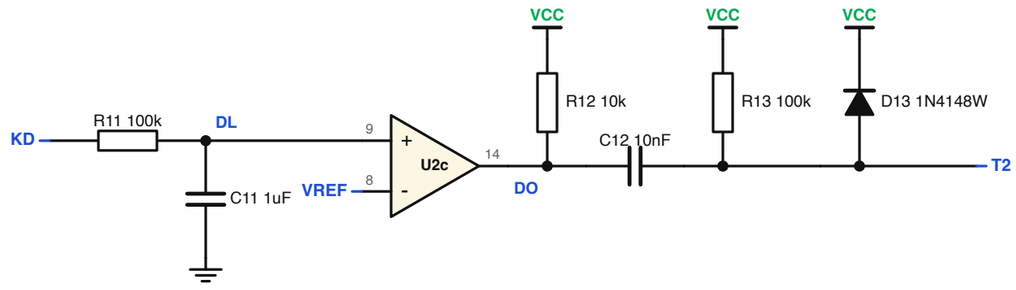

Fourth comparator (U2d, pins 10, 11, 13) is unused: pin 10 to VREF, pin 11 to GND.

6 PULSE TIMER 20 / 80 / 800 ms AND OPTO-TRIAC LEDS

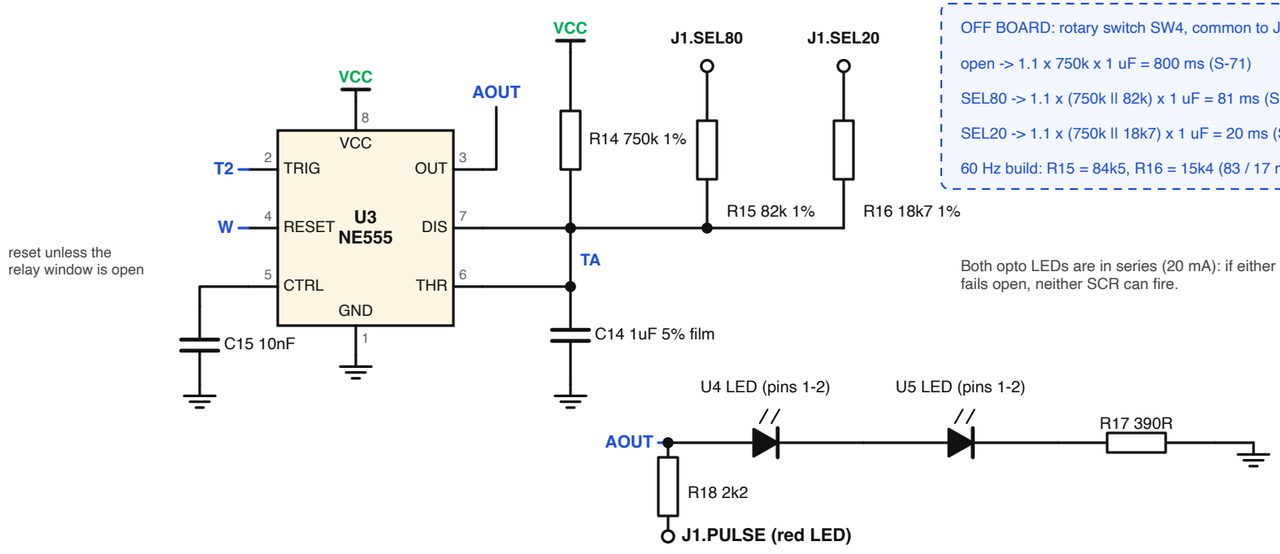

OFF BOARD: rotary switch SW4, common to J1.VCC

open -> 1.1 x 750k x 1 uF = 800 ms (S-71)

SEL80 -> 1.1 x (750k ll 82k) x 1 uF = 81 ms (S-70)

SEL20 -> 1.1 x (750k ll 18k7) x 1 uF = 20 ms (S-72)

60 Hz build: R15 = 84k5, R16 = 15k4 (83 / 17 ms; variant table below)

Both opto LEDs are in series (20 mA): if either LED fails open, neither SCR can fire.

7 ISOLATED SIDE 55 / 110 V AC

U4 and U5 are MOC3063 zero-crossing opto-triacs; their LEDs are in block 6.

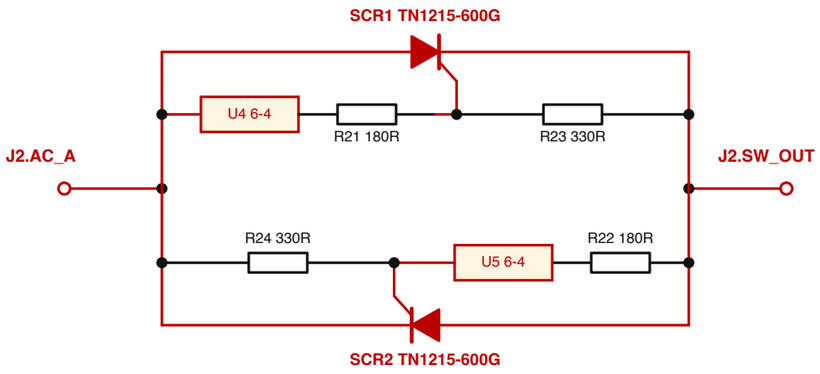

MOC3063 only triggers within about 20 V of a zero crossing (phase angle 0), and each SCR turns itself off at the next current zero: whole half-cycles only.

7.7 mm copper-free barrier (6.0 min), 2 mm routed slot under U4/U5; only U4/U5 bridge it.

PARTS, SMD REV A (50 Hz build; 60 Hz changes in the variant table) red = safety-critical: no substitution without written approval

Reference	Value	Package	Part number
U1 U3	NE555	SOIC-8	NE555DR
U2	LM339	SOIC-14	LM339DR
U4 U5	MOC3063	SMD-6 (DIP-6 gull-wing)	MOC3063XSMT&R
SCR1 SCR2	TN1215-600G	D2PAK (TO-263)	TN1215-600G-TR
Q2	2N7002	SOT-23	2N7002LT1G
D1 D5 D6 D7 D13	1N4148W	SOD-123	1N4148W-7-F
D20	1N5819HW	SOD-123	1N5819HW-7-F
R1 R11 R13	100k 1%	0603	CRCW0603100KFKEA
R2 R4 R10 R12 R32	10k 1%	0603	CRCW060310K0FKEA
R3	220k 1%	0603	CRCW0603220KFKEA
R5	1M 1%	0603	CRCW06031M00FKEA
R6	330k 1%	0603	CRCW0603330KFKEA
R7	22k 1%	0603	CRCW060322K0FKEA
R9 R18 R19 R20	2k2 1%	0603	CRCW06032K20FKEA
R14	750k 1%	0603	CRCW0603750KFKEA

Reference	Value	Package	Part number
R15	82k 1% (50 Hz)	0603	CRCW060382K0FKEA
R16	18k7 1% (50 Hz)	0603	CRCW060318K7FKEA
R31	20k 1%	0603	CRCW060320K0FKEA
R17	390R 1%	1206	CRCW1206390RFKEA
R21 R22	180R 1%	1206	CRCW1206180RFKEAHP
R23 R24	330R 1%	1206	CRCW1206330RFKEAHP
C1 C4 C12 C15	10nF	0603	CC0603KRX7R9BB103
C2 C21 C22 C23 C31	100nF	0603	CC0603KRX7R9BB104
C5 C11	1uF	1206	CL31B105KBHNNNE
C14	1uF 5% film	THT film box, 5 mm pitch	MKS2C041001F00JSSD
C3 C20	100uF 25V	Al-el. can 8 x 6.2 mm (FK size E)	EEE-FK1E101P
C6	10uF 25V	Al-el. can 4 x 5.8 mm (FK size B)	EEE-FK1E100R
J1	15-way 3.5 mm	THT terminal block, 3.5 mm pitch	1751374 (MKDS 1/15-3,5)
J2	2-way 5.08 mm	THT terminal block, 5.08 mm pitch	1730395 (MKDS 2,5/ 2-5,08)
PCB	bare board	FR4 1.6 mm, 2 x 35 um	Gerbers s71_ctrl_smd rev A

PACKAGE PIN NUMBERS (footprints.json)

SCR1, SCR2 TN1215-600G-TR, D2PAK

Pin	D2PAK function	SCR1 net	SCR2 net
1	K cathode	SW_OUT	AC_A
2	A (cropped, no pad)	-	-
tab	A anode	AC_A	SW_OUT
3	G gate	G1	G2

Tabs are live and at different potentials.

Q2 2N7002LT1G, SOT-23 (TO-92 2N7000 was S-G-D)

Pin	SOT-23 function	Q2 net
1	G gate	W
2	S source	GND
3	D drain	KD

D20 1N5819HW-7-F, SOD-123 (1N4148W: same)

Pin	SOD-123 function	D20 net
K	cathode, band end	VCC
A	anode	VIN

TEST POINTS (pads only)

TP	Net	x, y mm	Shows
1	VCC	40.5, 40.2	after D20
2	GND	39.2, 9.6	0 V
3	VREF	20.2, 24.0	VCC / 3
4	BOUT	23.4, 16.4	lock-out
5	W	11.4, 16.4	relay window
6	AOUT	41.4, 36.4	pulse
7	KD	19.2, 13.6	relay drive

1.5 mm round pads, top side, 12 V side only; silk shows the net name. x, y from the lower-left board corner (out/board.json).

50 / 60 Hz ASSEMBLY VARIANTS (only R15, R16 change)

Ref	Build	Value	Part number
R15	50 Hz	82k 1%	CRCW060382K0FKEA
R15	60 Hz	84k5 1%	CRCW060384K5FKEA
R16	50 Hz	18k7 1%	CRCW060318K7FKEA
R16	60 Hz	15k4 1%	CRCW060315K4FKEA

Pulse T = 1.1 x (R14 ll R) x C14, R14 = 750k, C14 = 1 uF:

50 Hz: SEL80 81.3 ms (4 cycles of 20 ms), SEL20 20.1 ms (1 cycle)

60 Hz: SEL80 83.5 ms (5 cycles of 16.7 ms), SEL20 16.6 ms (1 cycle)

Open position (800 ms, R14 only) is the same in both builds.

DIFFERENCES FROM THE THROUGH-HOLE BOARD (Electronics/out/schematic_control)

Same circuit, reference designators, nets, values, J1/J2 terminal names and J1 order; only packages change.

All parts surface-mount on the top side except J1, J2 and C14 (through-hole, soldered after reflow).

SCR1, SCR2: ST TN1215-600G-TR in D2PAK (was BT151-650R, TO-220). Tab = anode, on about 3 cm2 of copper (the 12 A, 1.6 s fault case). IH 30 mA / IL 60 mA max (BT151: 20 / 40): keep-alive RK to be re-checked.

U4, U5: Isocom MOC3063XSMT&R (VDE-approved, 5000 Vrms), gull-wing SMD, pins as DIP-6.

Q2: 2N7002 in SOT-23 (pin order G-S-D differs from the TO-92 2N7000). D1-D13: 1N4148W, D20: 1N5819HW, SOD-123.

Barrier: 7.7 mm copper-free zone (6.0 min) with a 2 mm routed slot under U4/U5 (was the cut-strip moat).

J1: one-piece 15-way 3.5 mm pitch block (was 5.08 mm). J2: 2-way 5.08 mm, Phoenix MKDS 2,5.

C14 stays a 5 % film capacitor, through-hole. C6 is an SMD electrolytic; C5, C11 are 1206 X7R 50 V.

R21-R24: pulse-proof 1206 (CRCW-HP). Seven test points TP1-TP7 added (table above). Board 87 x 57 mm.

Not yet built or tested: the first lot is a prototype lot.