ASSEMBLY DRAWING - TOP SIDE (all SMD parts on top; three through-hole parts inserted from the top)

J1: wire entry faces the board edge

J2: wire entry faces the board edge

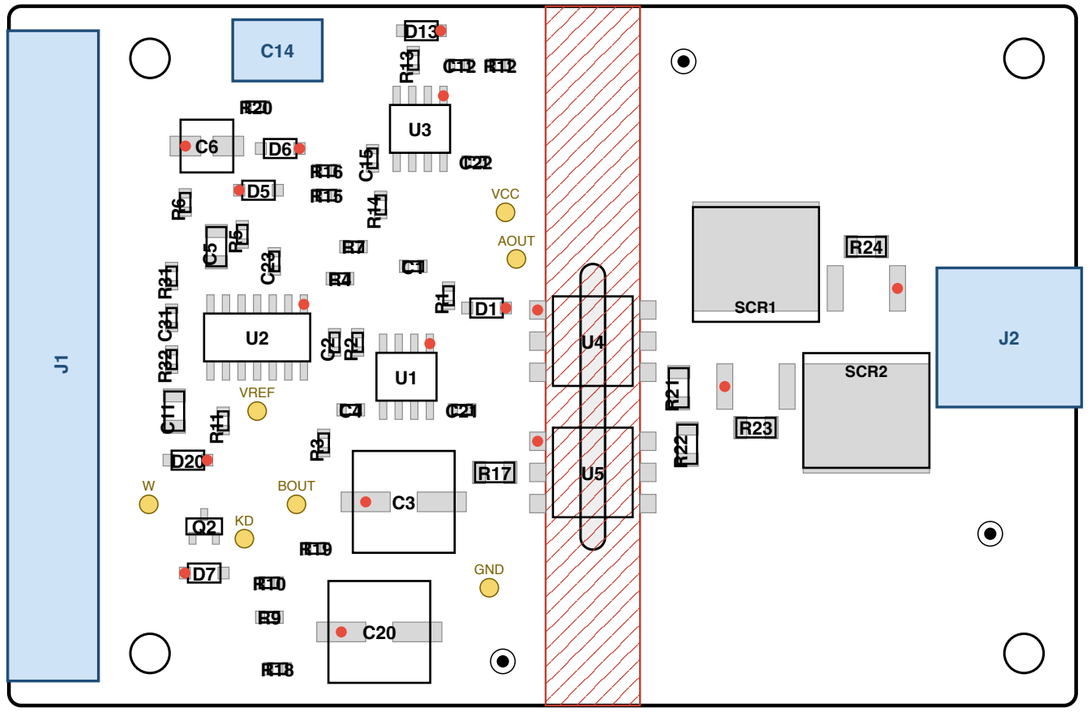

isolation barrier (hatched) with routed slot: keep clean, no flux residue, no parts

Legend: red dot = pin 1, diode cathode (K), electrolytic + pad. Blue = through-hole part (J1, J2, C14): solder after reflow, C14 last and by hand. Yellow = test point (pad only, no part). Black dot = fiducial.
U4, U5: pin 1 (dot) on the 12 V side; the bodies straddle the routed slot. ICs all in one orientation.
SCR1, SCR2: the tab is the anode, reflowed on a 3 x 3 grid of paste panes.
Values and part numbers: table on the right (from research/parts.json; the BOM is written separately).

ref	value	package	part number
C1	10nF	0603 (1608 metric)	CC0603KRX7R9BB103
C2	100nF	0603 (1608 metric)	CC0603KRX7R9BB104
C3	100uF 25V	Panasonic FK size E (8.0	EEE-FK1E101P
C4	10nF	0603 (1608 metric)	CC0603KRX7R9BB103
C5	1uF	1206 (3216 metric)	CL31B105KBHNNNE
C6	10uF 25V	Panasonic FK size B (4.0	EEE-FK1E100R
C11	1uF	1206 (3216 metric)	CL31B105KBHNNNE
C12	10nF	0603 (1608 metric)	CC0603KRX7R9BB103
C14	1uF 5% film	Radial box 7.2 x 5 x 10	MKS2C041001F00JSSD (THT)
C15	10nF	0603 (1608 metric)	CC0603KRX7R9BB103
C20	100uF 25V	Panasonic FK size E (8.0	EEE-FK1E101P
C21	100nF	0603 (1608 metric)	CC0603KRX7R9BB104
C22	100nF	0603 (1608 metric)	CC0603KRX7R9BB104
C23	100nF	0603 (1608 metric)	CC0603KRX7R9BB104
C31	100nF	0603 (1608 metric)	CC0603KRX7R9BB104
D1	1N4148W	SOD-123	1N4148W-7-F
D5	1N4148W	SOD-123	1N4148W-7-F
D6	1N4148W	SOD-123	1N4148W-7-F
D7	1N4148W	SOD-123	1N4148W-7-F
D13	1N4148W	SOD-123	1N4148W-7-F
D20	1N5819HW	SOD-123	1N5819HW-7-F
J1	15-way 3.5 mm	Phoenix MKDS 1/15-3,5	1751374 (MKDS 1/15-3,5) (THT)
J2	2-way 5.08 mm	Phoenix MKDS 2,5/ 2-5,08	1730395 (MKDS 2,5/ 2-5,08) (THT)
Q2	2N7002	SOT-23 (onsemi case 318,	2N7002LT1G
R1	100k 1%	0603 (1608 metric)	CRCW0603100KFKEA
R2	10k 1%	0603 (1608 metric)	CRCW060310K0FKEA
R3	220k 1%	0603 (1608 metric)	CRCW0603220KFKEA
R4	10k 1%	0603 (1608 metric)	CRCW060310K0FKEA
R5	1M 1%	0603 (1608 metric)	CRCW06031M00FKEA
R6	330k 1%	0603 (1608 metric)	CRCW0603330KFKEA
R7	22k 1%	0603 (1608 metric)	CRCW060322K0FKEA
R9	2k2 1%	0603 (1608 metric)	CRCW06032K20FKEA
R10	10k 1%	0603 (1608 metric)	CRCW060310K0FKEA
R11	100k 1%	0603 (1608 metric)	CRCW0603100KFKEA
R12	10k 1%	0603 (1608 metric)	CRCW060310K0FKEA
R13	100k 1%	0603 (1608 metric)	CRCW0603100KFKEA
R14	750k 1%	0603 (1608 metric)	CRCW0603750KFKEA
R15	82k 1%	0603 (1608 metric)	CRCW060382K0FKEA
R16	18k7 1%	0603 (1608 metric)	CRCW060318K7FKEA
R17	390R 1%	1206 (3216 metric)	CRCW1206390RFKEA
R18	2k2 1%	0603 (1608 metric)	CRCW06032K20FKEA
R19	2k2 1%	0603 (1608 metric)	CRCW06032K20FKEA
R20	2k2 1%	0603 (1608 metric)	CRCW06032K20FKEA
R21	180R 1%	1206 (3216 metric)	CRCW1206180RFKEAHP
R22	180R 1%	1206 (3216 metric)	CRCW1206180RFKEAHP
R23	330R 1%	1206 (3216 metric)	CRCW1206330RFKEAHP
R24	330R 1%	1206 (3216 metric)	CRCW1206330RFKEAHP
R31	20k 1%	0603 (1608 metric)	CRCW060320K0FKEA
R32	10k 1%	0603 (1608 metric)	CRCW060310K0FKEA
SCR1	TN1215-600G	D2PAK (TO-263, 2 leads +	TN1215-600G-TR
SCR2	TN1215-600G	D2PAK (TO-263, 2 leads +	TN1215-600G-TR
U1	NE555	SOIC-8 (TI D, D0008A)	NE555DR
U2	LM339	SOIC-14 (TI D, D0014A)	LM339DR
U3	NE555	SOIC-8 (TI D, D0008A)	NE555DR
U4	MOC3063	6-pin DIP, SMD gull-wing	MOC3063XSMT&R
U5	MOC3063	6-pin DIP, SMD gull-wing	MOC3063XSMT&R

MATSUMOTO S-71 PULSE CONTROL - SMD REV A

Assembly drawing, top side	scale 2:1
drawing generated 2026-11-22 by make_smd.py; dimensions mm	date 2026-11 sheet 1/1